SIZE	DWG NO	SHT	REV
A	GMP4	1	

REV	DESCRIPTION	DATE	APPROVED

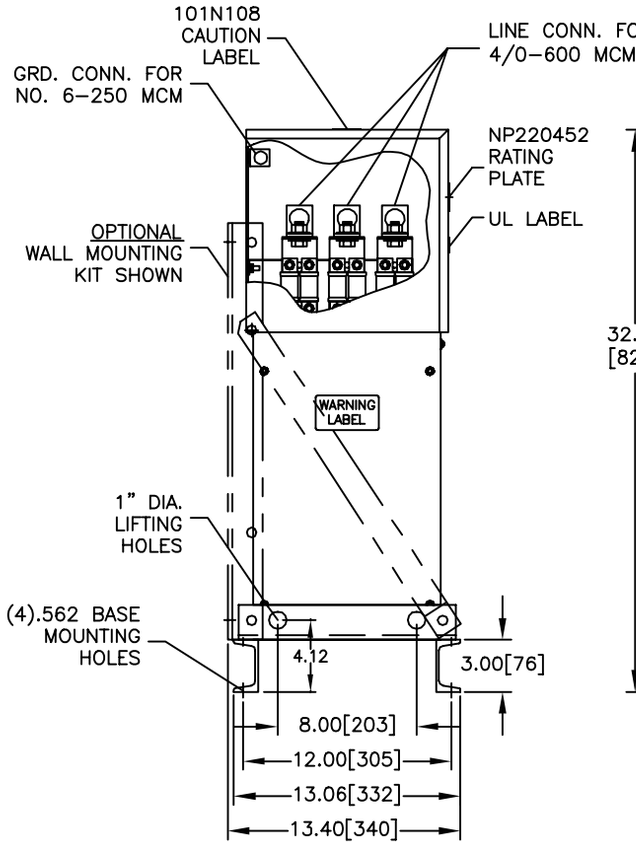

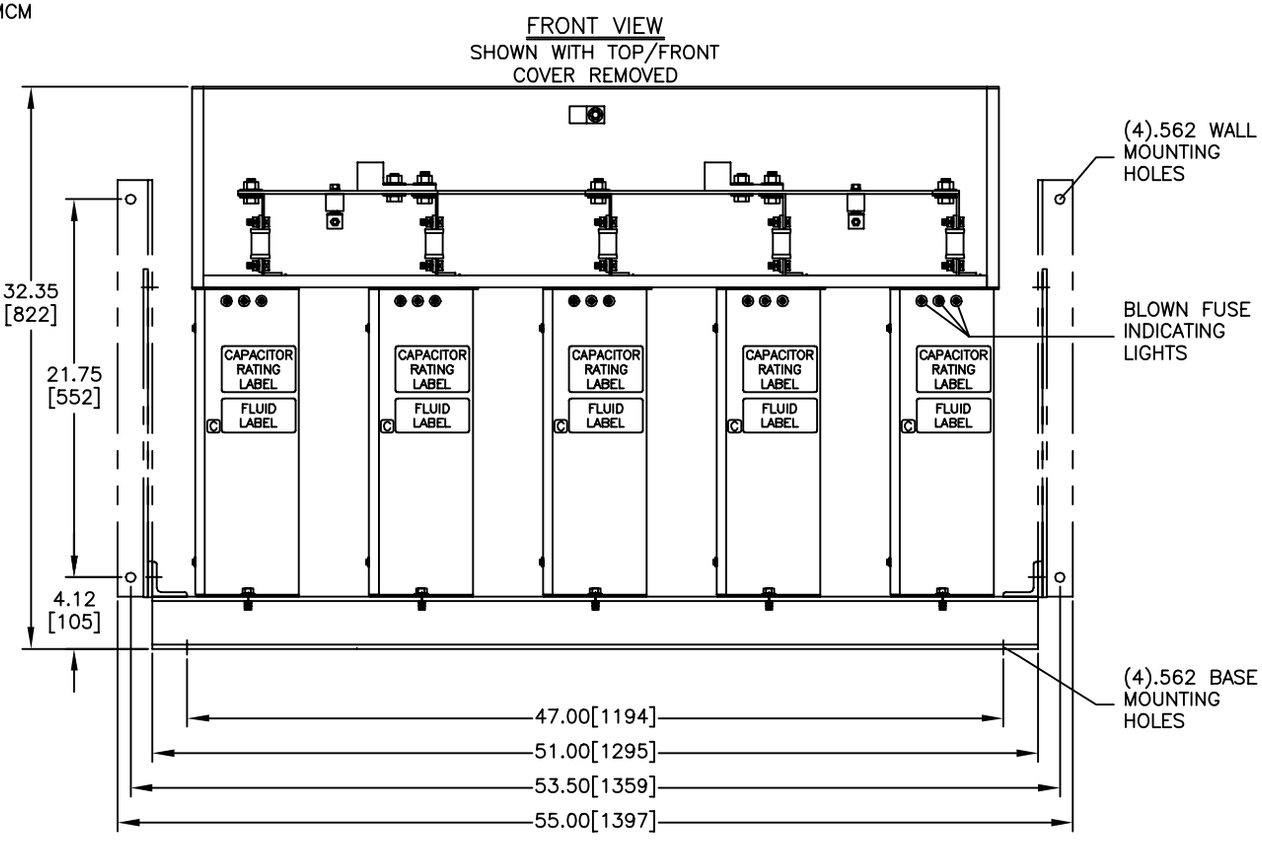

AVAILABLE RATINGS:

210–250 KVAR 240V 60HZ 1PH
210–250 KVAR 240V 60HZ 3PH DELTA CONN.
425–500 KVAR 480V 60HZ 1PH
425–500 KVAR 480V 60HZ 3PH DELTA CONN.
425–500 KVAR 600V 60HZ 3PH WYE CONN.

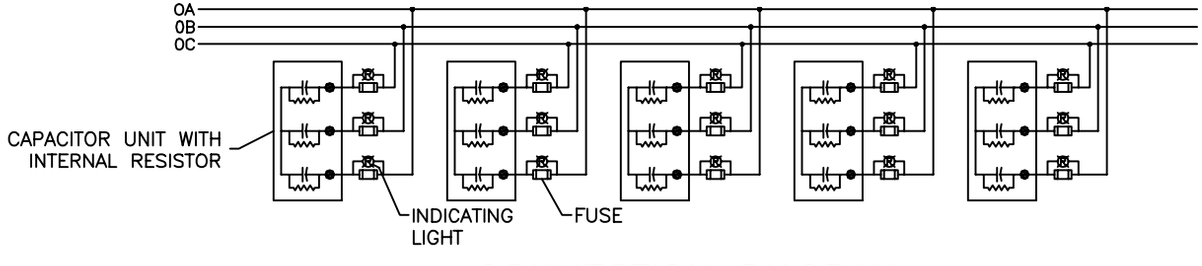

CONNECTION DIAGRAM

TYPICAL 3PH 3 FUSE ASSEMBLY SHOWN WITH INDICATING LIGHTS

Ultravar™ POWER FACTOR CORRECTION
FORT EDWARD, N.Y., U.S.A.

DRAWN	B. ROSS	DATE	MAY 12, 2003
ISSUED		DATE	

SIZE A

SCALE

OUTLINE GMP7

SHEET 1 CONT ON —

DISTR. TO